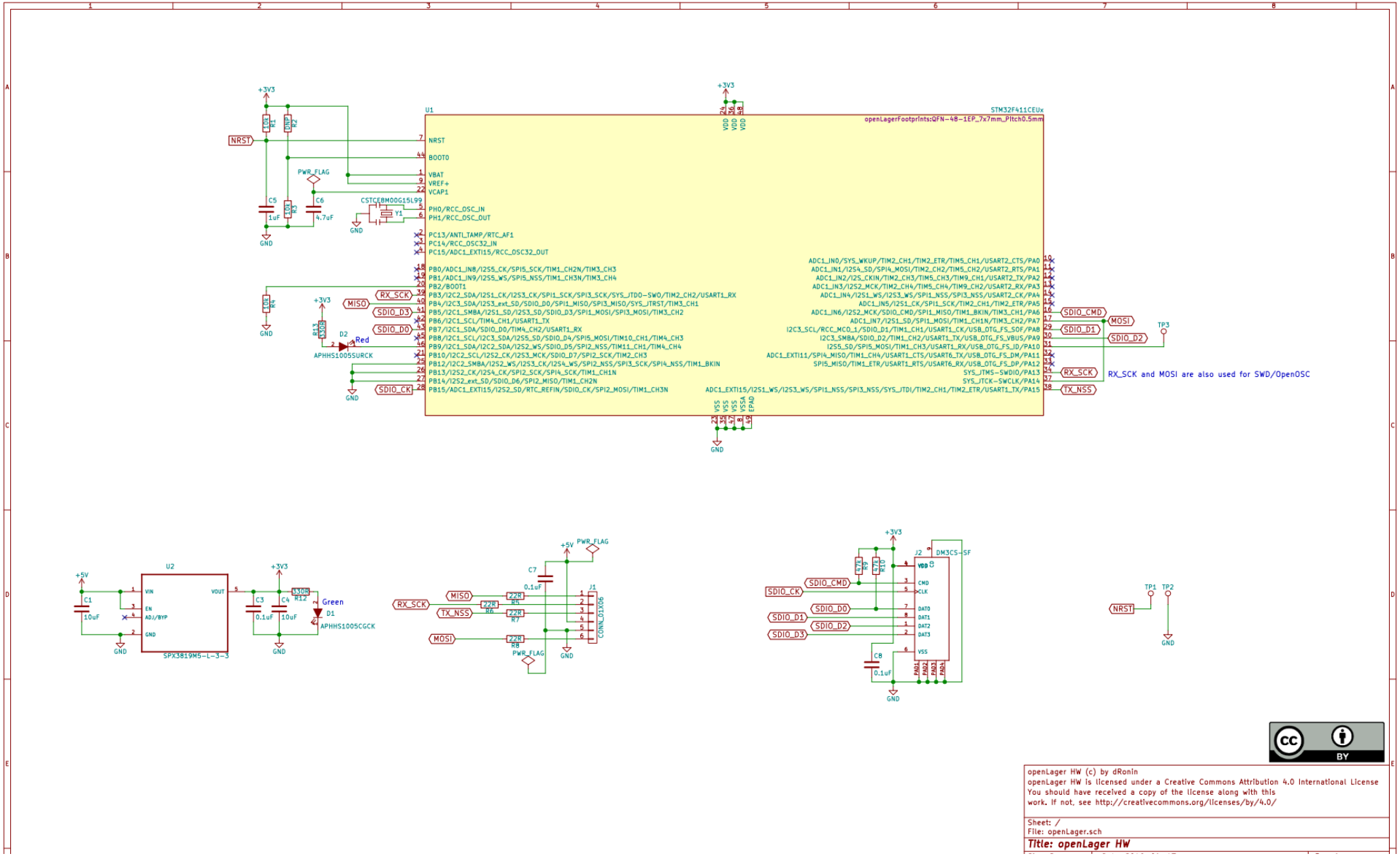

openLager HW (c) by dRonin
openLager HW is licensed under a Creative Commons Attribution 4.0 International License
You should have received a copy of the license along with this
work. If not, see http://creativecommons.org/licenses/by/4.0/

Sheet: /
File: openLager.sch

Title: openLager HW

Size: B
Date: 2016-04-17
Rev: A
KiCad E.D.A. kicad 4.0.2-stable
Id: 1/1
1
2
3
4
5
6
7
8