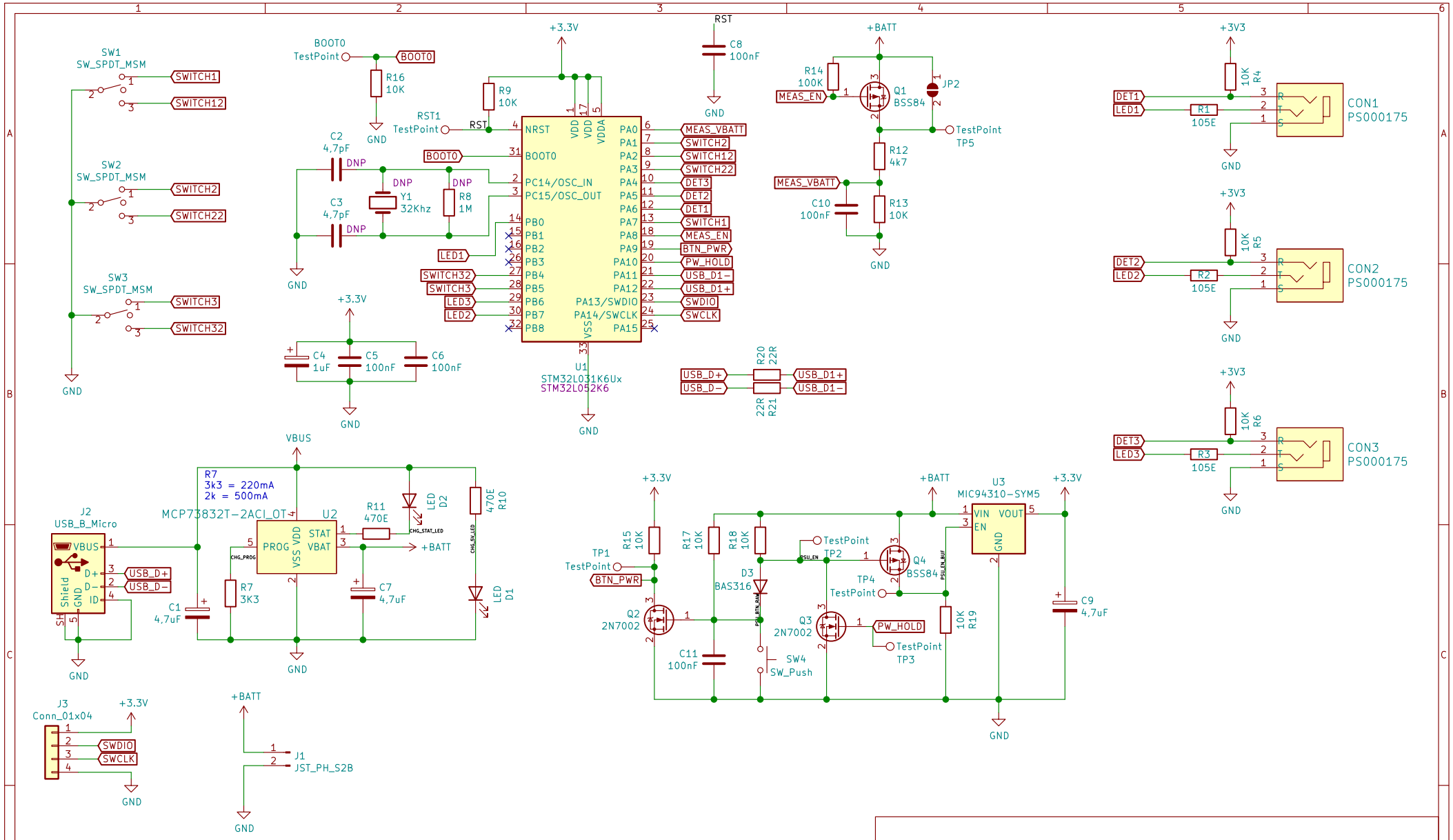

www.electronicareparaties.nl
designed by Willem
hollandtricks.com

Sheet: /
File: ledTruck.sch

Title: Leo-Led-truck

Size: A4	Date: 2021-03-26	**Rev: v1.1**
KiCad E.D.A. kicad (5.1.9-0-10_14)		Id: 1/1